LEDSION

LED Panel Lighting

LS120336W

LISTED
LUMINAIRE
ISSUE NO.

Product Description

- Driver protected by junction box, fixed on the back of panel, more secure and stable.
- Stable driver with UL/cUL, famous brand LED with LM-80 report, 3-5 years warranty.
- Approved by DLC /UL.For UL, please link to www.ul.com for DLC,link to www.designlights.org
- Screw nuts embedded in the back plate, achieves all kinds of feasible installation methods.
- Adopting whole back plate to achieve heat dissipation, larger heat dissipation area than dissipate by frame.
- Outperforms fluorescent lighting,outstanding energy savings,zero maintenance, no need to relamp.

Dimension

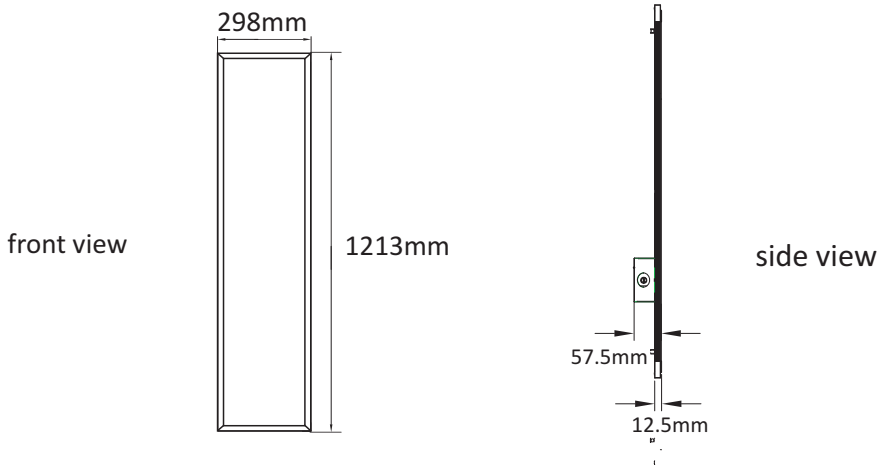

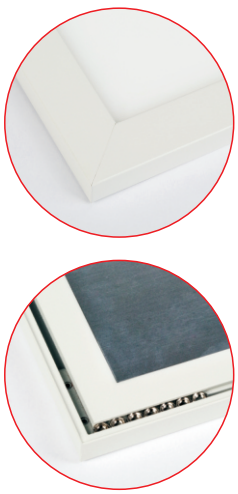

LEDSION

Product Specification

Product Name	LS120336W
Rated Power	36W
Input-voltage	100~277VAC
Frequency	50~60Hz
Power Factor	>0. 9
Color Temperature（optional）	WW/PW/CW
Luminous Flux（typical）	3200±200LM
Beam Angle	120°
CRI	≥80
SDCM	< 6. 0
THD	<18%
Dimming Function	0-10V dimmable（Optional）
Operating Temperature	-25℃~+40℃
Finish Color	White
Heat Sinker	6063 Aluminum
LED Lifespan	>50000h
Warranty	3-5 years

Color Temperature and SDCM < 6

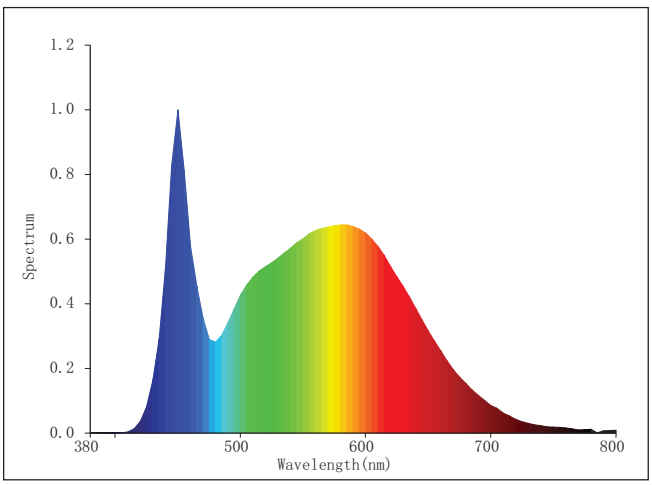

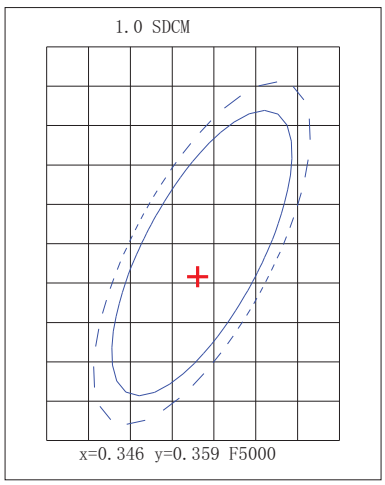

Distribution Curve Flux

Luminaire Budgetary Diagram

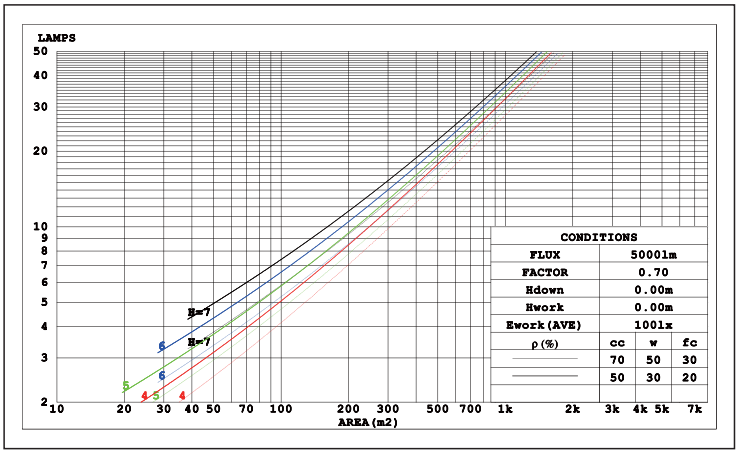

Rectangle ISO Light Intensity Curve

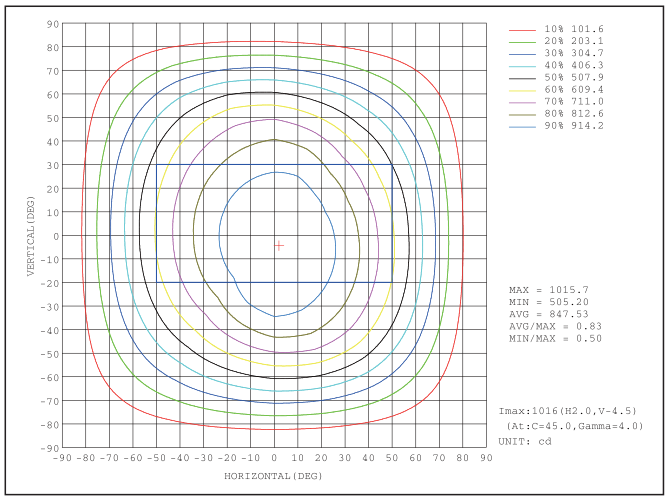

Illuminance–Distance Curve

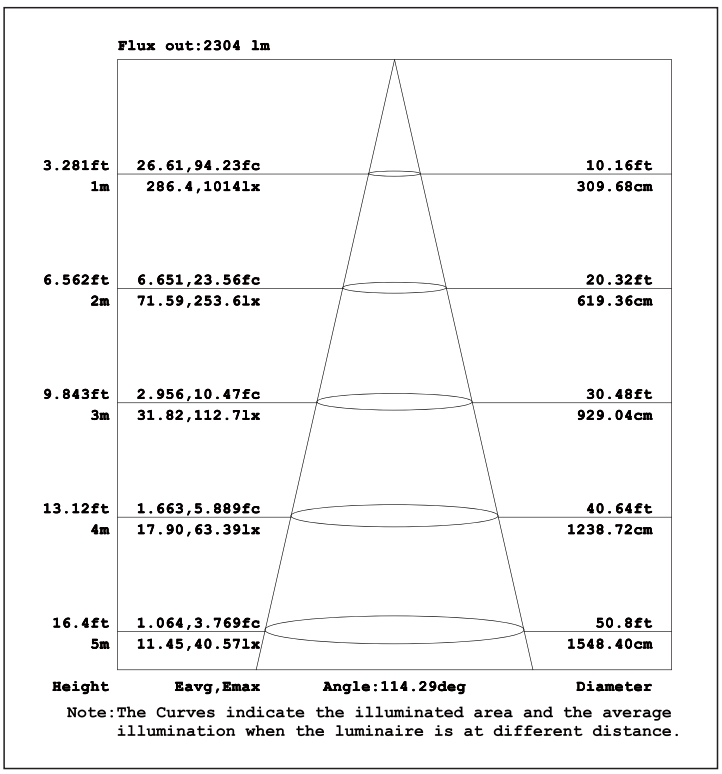

Note:The Curves indicate the illuminated area and the average illumination when the luminaire is at different distance.

Illuminance–Distance Curve

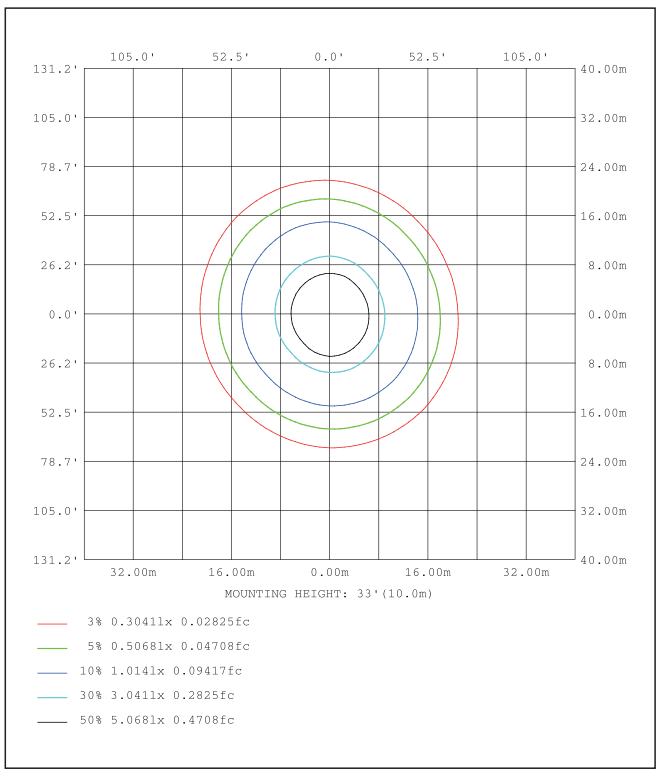

Application Reference

Application for most indoor area for Commercial Lighting,
residential lighting and Industrial lighting, etc.

Warning and caution:

①Don't use in completely enclosed fixture and damp area.

② Used as safety or emergency lamps are not recommened.

③ Install the lamps by professional person strictly abide by the instructions.

Installation Guide

Recessed Installation:

1.Install panel light on the ceiling board

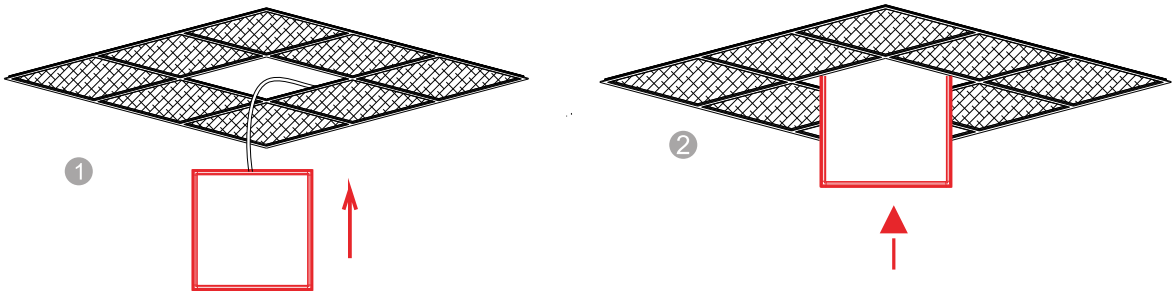

⚠ Note:

1> Turn over panel light with 45°and put it on the ceiling board.
Do not press or pass through ceiling board strongly.
2> Carefully install it so that it get a good lighting effect.
3> Consider the installation specification(Size) before choose the recessed panel light.

2. Take the lighting surface of panel light down.

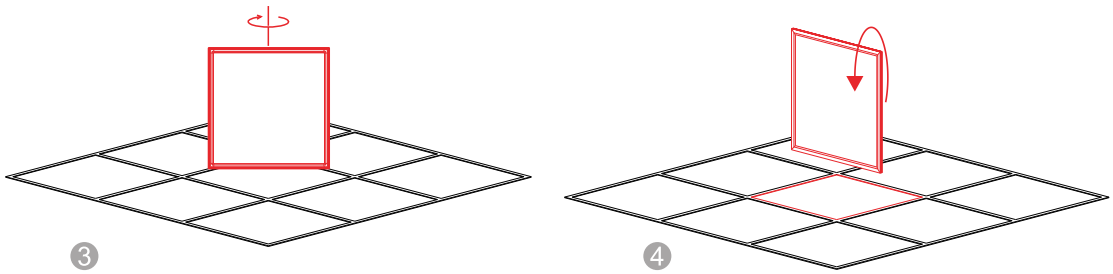

3. Aligning the site of panel light and ceiling board and finish the installation.

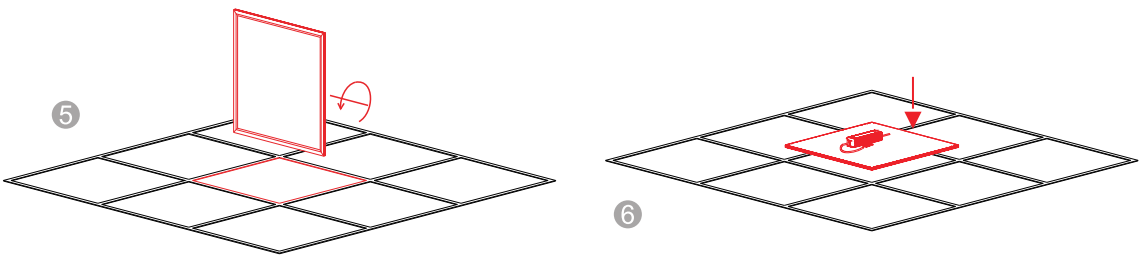

4.The picture for finishing the installation and light it.

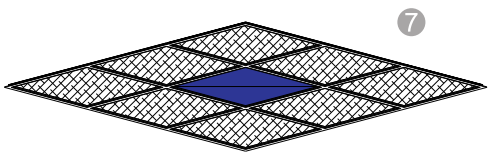

⚠ Importance:

1>Finish the installation, check the connectors.
2>Check all connectors' "+" and "-" poles to be connected correctly.
3>Check the sites with screws are locked tightly or not.

Connection Mode

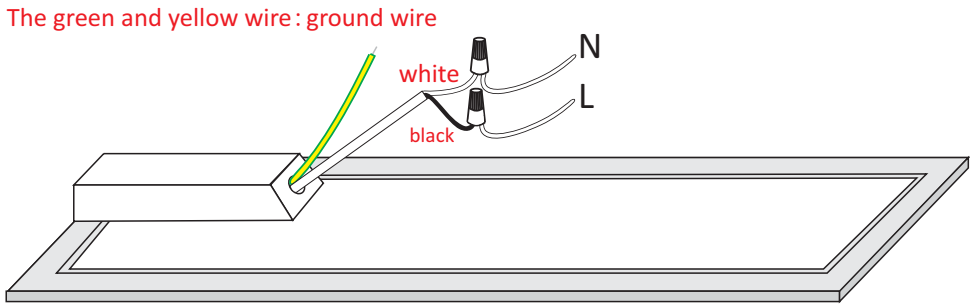

(1) Non-dimmable wiring diagram

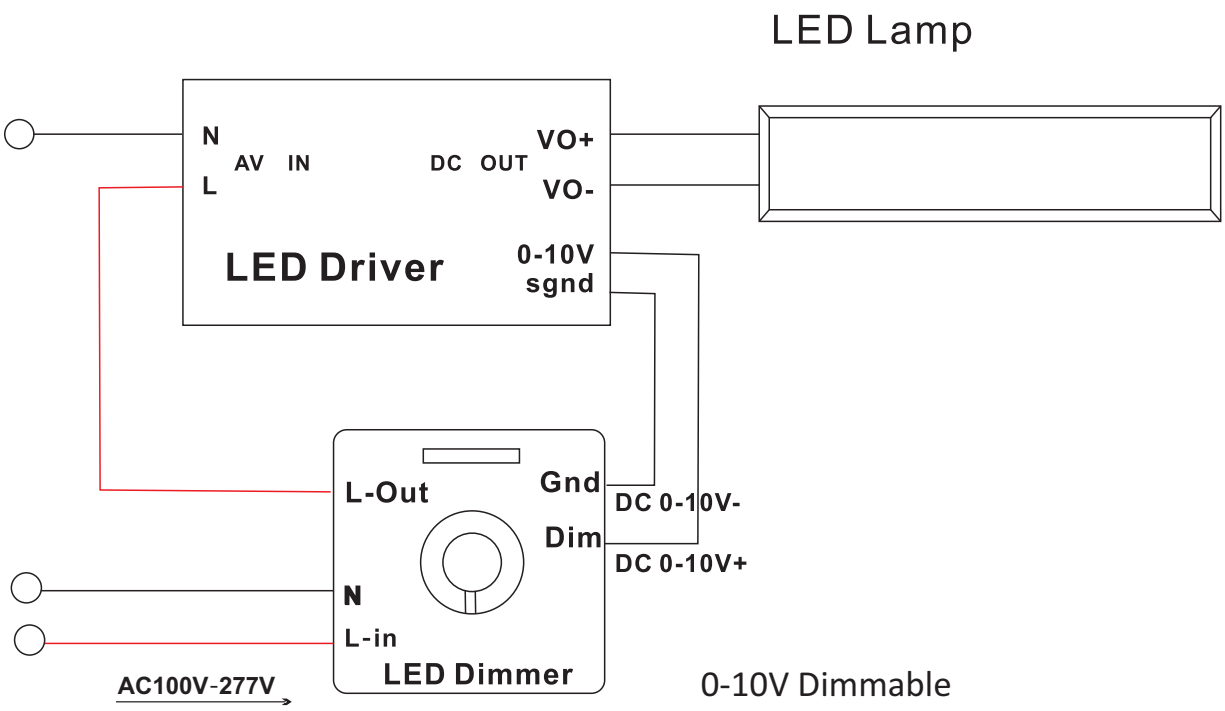

0-10V Dimmable

Luminous Decay Graph

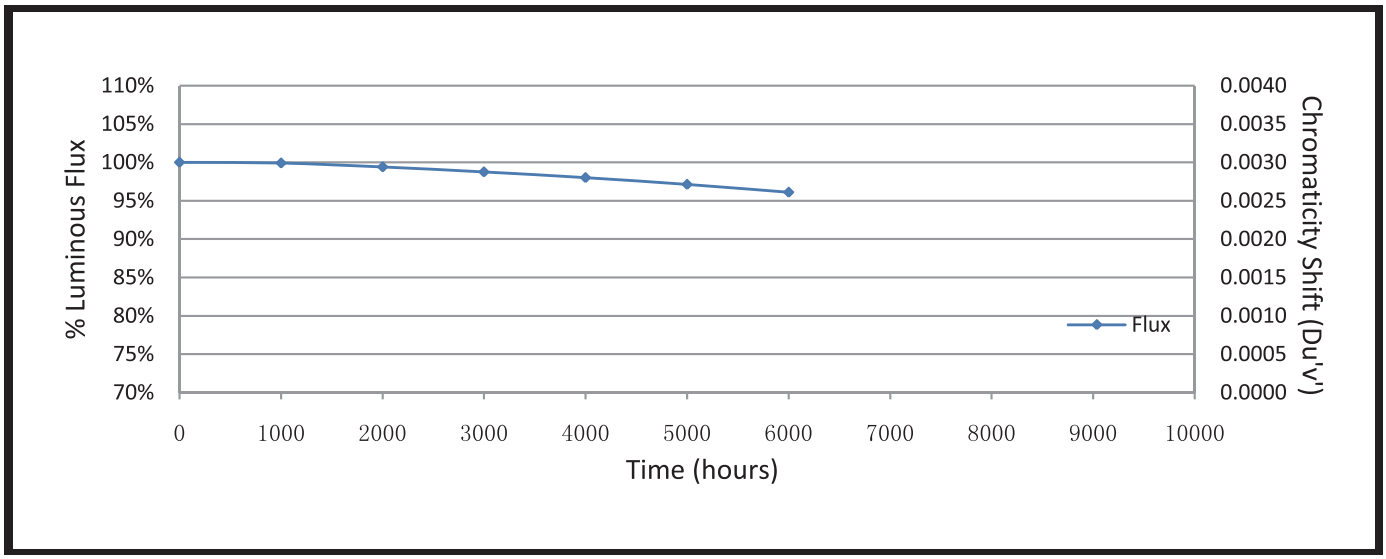

Packing Information

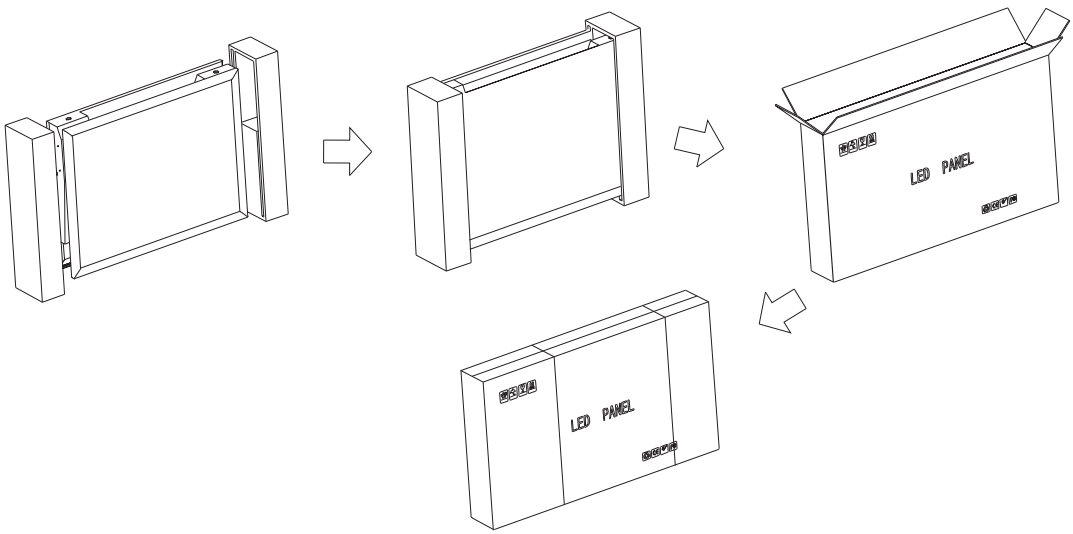

N. W:4.73kg
Quantity: 2 pcs/carton
.